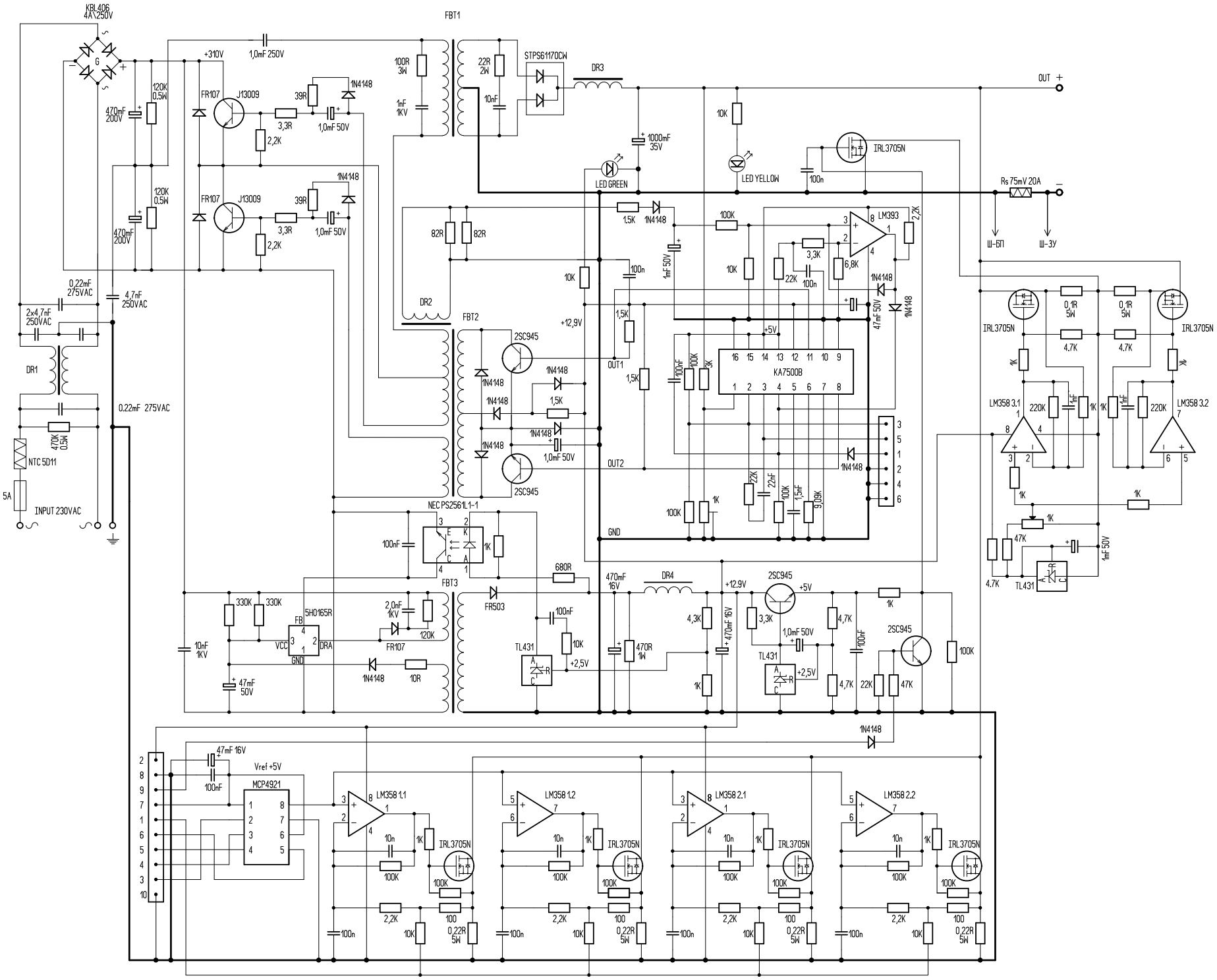
KBL406
4A\250V
FBT1
+310V
1,0mF 250V
100R
3W
22R
2W
STPS61170CW
DR3
OUT +
120K
0.5W
470mF
200V
FR107
J13009
39R
1N4148
3,3R
2,2K
1,0mF 50V
1nF
1KV
10nF
1000mF
35V
10K
IRL3705N
LED GREEN
LED YELLOW
100n
Rs 75mV 20A
OUT −
Ш-БП
Ш-ЗУ
1,5K
100K
LM393
2,2K
82R
3,3K
6,8K
22K
1mF 50V
47mF 50V
DR2
FBT2
2SC945
+12,9V
OUT1
+5V
KA7500B
OUT2
GND
0,22mF
275VAC
4,7nF
250VAC
2x4,7nF
250VAC
DR1
470K
0.5W
NTC 5D11
5A
INPUT 230VAC
0.22mF 275VAC
NEC PS2561L1-1
100nF
680R
FBT3
FR503
330K
5H0165R
FB
VCC
DRA
GND
2,0nF
1KV
10nF
1KV
47mF
50V
1N4148
10R
TL431
+2,5V
470mF
16V
DR4
470R
1W
4,3K
3,3K
4,7K
22K
47K
IRL3705N
0,1R
5W
4.7K
LM358 3.1
LM358 3.2
220K
1mF
47K
47mF 16V
Vref +5V
MCP4921
LM358 1.1
LM358 1.2
LM358 2.1
LM358 2.2
10n
0,22R
5W