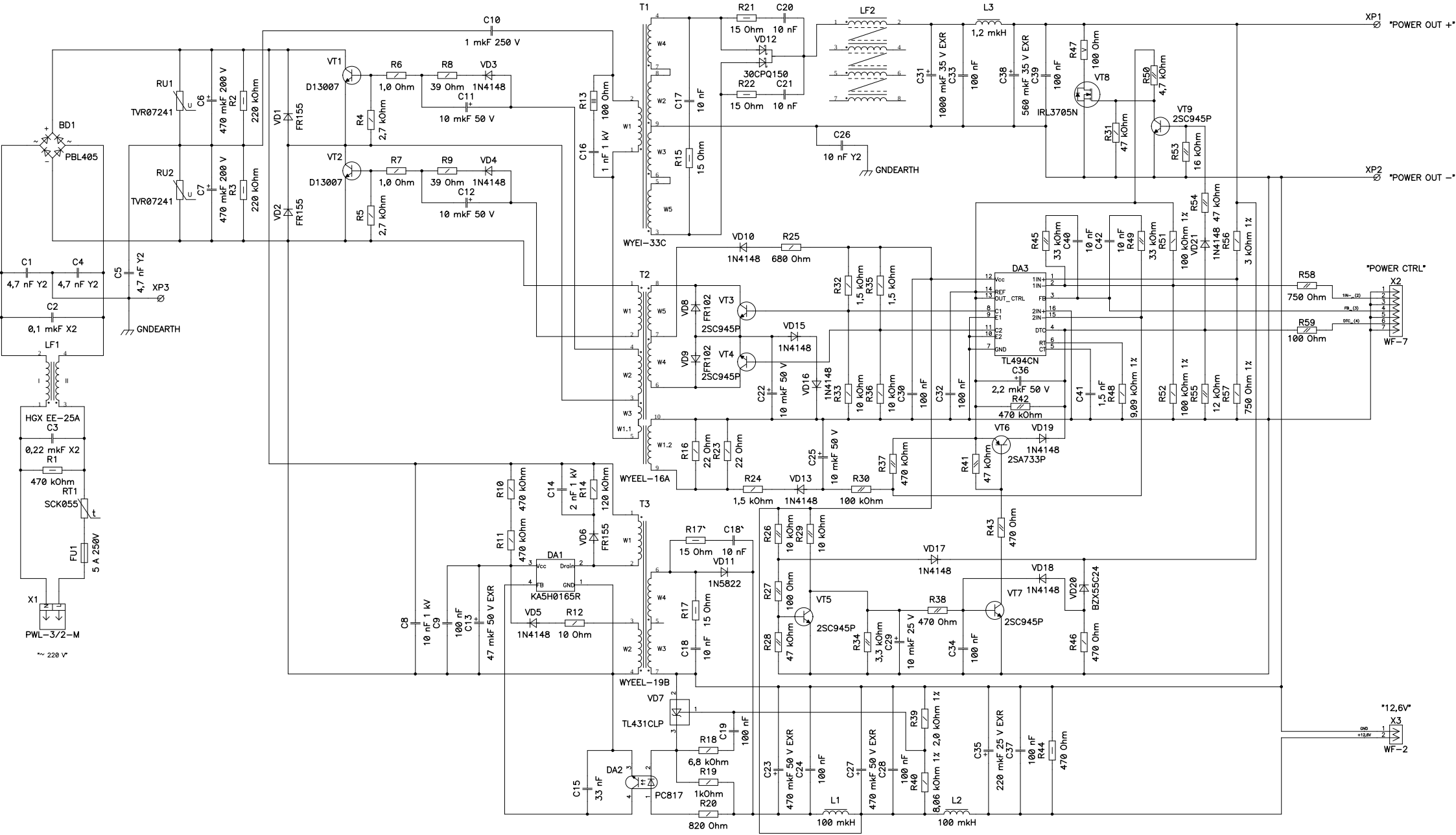
BD1
PBL405
RU1
TVR07241
RU2
TVR07241
C6
470 mkF 200 V
C7
470 mkF 200 V
R2
220 kOhm
R3
220 kOhm
VD1
FR155
VD2
FR155
VT1
D13007
VT2
D13007
R6
1,0 Ohm
R8
39 Ohm
VD3
1N4148
C11
10 mkF 50 V
R7
1,0 Ohm
R9
39 Ohm
VD4
1N4148
C12
10 mkF 50 V
R4
2,7 kOhm
R5
2,7 kOhm
C10
1 mkF 250 V
R13
100 Ohm
C16
1 nF 1 kV
C1
4,7 nF Y2
C4
4,7 nF Y2
C5
4,7 nF Y2
XP3
C2
0,1 mkF X2
GNDEARTH
LF1
HGX EE-25A
C3
0,22 mkF X2
R1
470 kOhm
RT1
SCK055
FU1
5 A 250V
X1
PWL-3/2-M
"~ 220 V"
T1
WYEI-33C
W1
W2
W3
W4
W5
C17
10 nF
R15
15 Ohm
R21
15 Ohm
C20
10 nF
VD12
30CPQ150
R22
15 Ohm
C21
10 nF
C26
10 nF Y2
GNDEARTH
LF2
C31
1000 mkF 35 V EXR
C33
100 nF
L3
1,2 mkH
C38
560 mkF 35 V EXR
C39
100 nF
R47
100 Ohm
VT8
IRL3705N
R50
4,7 kOhm
VT9
2SC945P
R31
47 kOhm
R53
16 kOhm
XP1
"POWER OUT +"
XP2
"POWER OUT –"
T2
WYEEL-16A
W1
W2
W3
W1.1
W1.2
W4
W5
VD10
1N4148
R25
680 Ohm
VD8
FR102
VT3
2SC945P
VD9
FR102
VT4
2SC945P
VD15
1N4148
C22
10 mkF 50 V
VD16
1N4148
R32
1,5 kOhm
R35
1,5 kOhm
R33
10 kOhm
R36
10 kOhm
C30
100 nF
C32
100 nF
R16
22 Ohm
R23
22 Ohm
C25
10 mkF 50 V
R24
1,5 kOhm
VD13
1N4148
R30
100 kOhm
R37
470 kOhm
DA3
TL494CN
Vcc
REF
OUT_CTRL
C1
E1
C2
E2
GND
1IN+
1IN–
FB
2IN+
2IN–
DTC
R1
C1
R45
33 kOhm
C40
10 nF
C42
10 nF
R49
33 kOhm
R51
100 kOhm 1%
VD21
1N4148
R54
47 kOhm
R56
3 kOhm 1%
C36
2,2 mkF 50 V
R42
470 kOhm
C41
1,5 nF
R48
9,09 kOhm 1%
R52
100 kOhm 1%
R55
12 kOhm
R57
750 Ohm 1%
R41
47 kOhm
VT6
2SA733P
VD19
1N4148
R58
750 Ohm
R59
100 Ohm
"POWER CTRL"
X2
WF-7
1IN+_(2)
FB_(3)
DTC_(4)
T3
WYEEL-19B
W1
W2
W3
W4
R10
470 kOhm
R11
470 kOhm
C14
2 nF 1 kV
R14
120 kOhm
VD6
FR155
DA1
KA5H0165R
Vcc
Drain
FB
GND
VD5
1N4148
R12
10 Ohm
C8
10 nF 1 kV
C9
100 nF
C13
47 mkF 50 V EXR
R17`
15 Ohm
C18`
10 nF
VD11
1N5822
R17
15 Ohm
C18
10 nF
R26
10 kOhm
R29
10 kOhm
R27
100 Ohm
R28
47 kOhm
VT5
2SC945P
R34
3,3 kOhm
C29
10 mkF 25 V
R38
470 Ohm
C34
100 nF
VT7
2SC945P
VD17
1N4148
VD18
1N4148
VD20
BZX55C24
R43
470 Ohm
R46
470 Ohm
VD7
TL431CLP
R18
6,8 kOhm
C19
100 nF
R19
1kOhm
R20
820 Ohm
DA2
PC817
C15
33 nF
C23
470 mkF 50 V EXR
C24
100 nF
L1
100 mkH
C27
470 mkF 50 V EXR
C28
100 nF
R39
2,0 kOhm 1%
R40
8,06 kOhm 1%
L2
100 mkH
C35
220 mkF 25 V EXR
C37
100 nF
R44
470 Ohm
"12,6V"
X3
WF-2
GND
+12,6V